DENER®
MACHINE TOOLS

DENER MAKİNA SAN. TİC. A.Ş

+90 352 321 13 50
+90 352 321 13 53

Sultansazı OSB 6. Sk. No:12
38560 / İncesu / KAYSERİ / TR

info@dener.com
www.dener.com

R-2308-ER-YL-01-EN

DENER®
MACHINE TOOLS

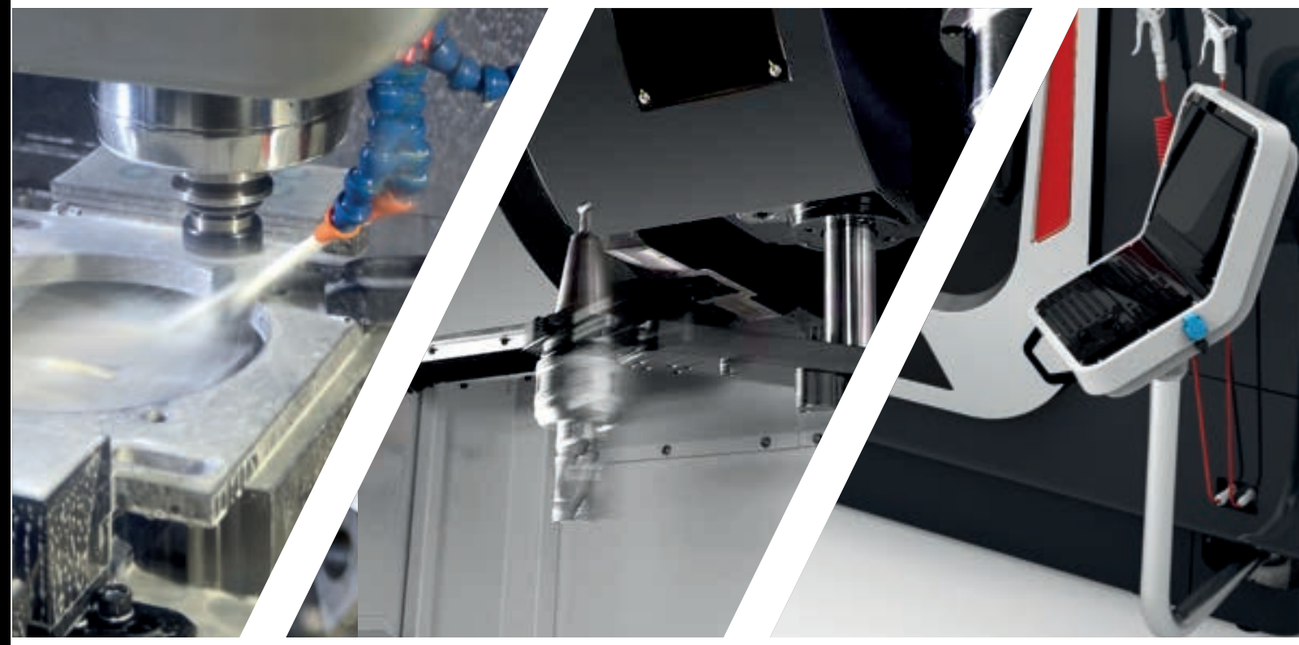

CNC VERTICAL MACHINING CENTER

ABOUT US

Dener Makina was established in 1974 in Kayseri Old Industrial Zone. Since 2000, Dener Makine has focused on the production of CNC Sheet Metal Processing Machines and continues its production with a wide range of products including Guillotine Shears, Hydraulic Press Brakes, Ball Screw Press Brakes, Servo Electric Press Brakes, Plasma Cutting Machines and Fiber Laser Cutting Machines.

In 2016, the company made a significant investment by incorporating 155,000 m² factory buildings and 27,000 m² social facilities located on 1,300,000 m² of land owned by TAKSAN A.Ş. In the new period, Taksan Integrated Facilities started the production of CNC Metal Processing Machines such as Double Column Machining Centres, 5 Axis Simultaneous Machining Centres, Vertical Machining Centres, Lathes and Grinding Machines.

Dener Makina, CNC Sheet Metal Processing Machines and CNC Metal Processing Machines, with its wide range of machinery production, half a century of experience, qualified workforce and multinational R&D centre, is the first in the world by offering important investment products to the world industrial enterprises.

DENER®

INDEX

CNC VERTICAL MACHINING CENTERS

03 Overview
04 Standard / Optional Equipment
05 Body Structure and Operational Area
06 Workpiece Loading and Working Capacity
07 Tool Changer System
08 Chip Conveyor
09 Technichal Data

TMC-SERIES CNC VERTICAL MACHINING CENTERS

Overview

CNC Vertical Machining Centers assure to achieve optimal performance for all kinds of workpiece. DNRdema is offering longtime industry experiences to meet a wide range of operational needs from high-precision milling under all conditions for drilling, pocketing, boring, screw-cutting to tapping. Furthermore, ergonomical LCD screen panel with CNC controlling simplifies manual programming and data entry for the machines.

- Custom made double nut screws with high precision and no backlash
- Fast and smooth automatic tool changer system
- Direct drive coupling spindles with high accuracy and rigidity
- High precision, economical and linear motion
- Effective and smooth motion on linear guide rails or box way rails
- Excellent accuracy of positioning and high-precision for repetitiveness
- Meehanite casting with annealed & stress relieved
- Ensuring quiet, stable and accurate cutting
- Free of charge for assembling machines and educational support domestically
- On-time service with spare parts and delivery

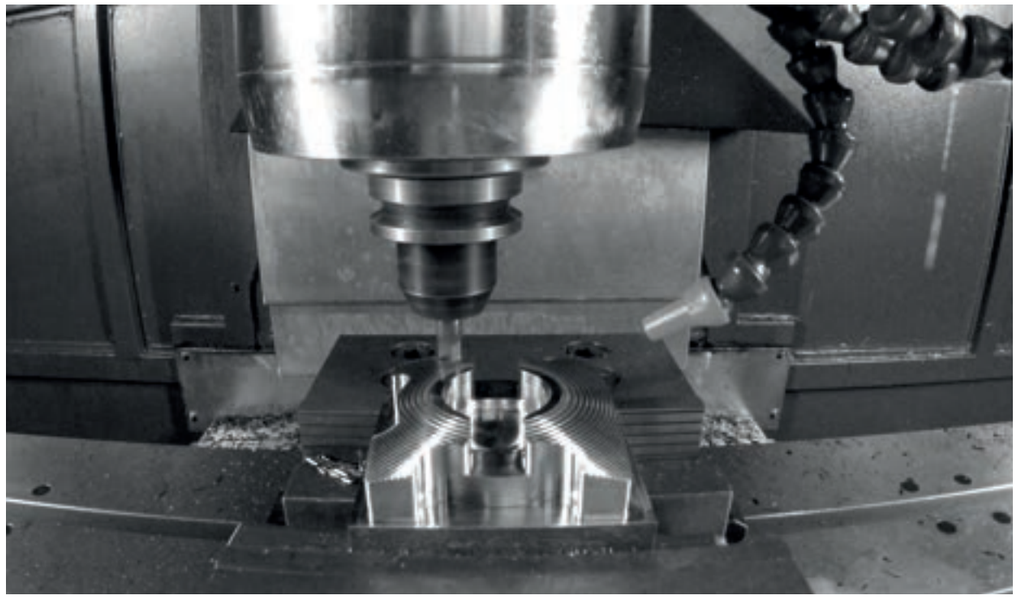

Standard Equipments

✓ Mitsubishi M80A-8A
✓ Simple programming function (Navi-Mill)
✓ BBT 40/10.000 rpm direct drive spindle
✓ BBT 40 arm type 24 tools ATC
✓ C3 class double nuts ball-screw
✓ Ball type or roller linear motion guide
✓ Fully enclosed splash guard
✓ Screw-Steelbelt type chip conveyor
✓ Automatic lubricating system
✓ Spindle air blowing coolant system
✓ Coolant nozzles around spindle
✓ Oil skimmer
✓ Rigid tapping
✓ Washing the chips system inside cabin
✓ Heat exchanger for the electrical cabinet
✓ Transformer 380/200v - 3 phase 50/60Hz
✓ Led work light / Program light
✓ Front door safety switch
✓ Air gun / Coolant gun
✓ Coolant equipment
✓ Remote handwheel
✓ 4th axis pre-wire (inner cable)
✓ Automatic power-off system
✓ Foundation bolt kit & Plates
✓ Toolbox & Tools
✓ CE

Optional Equipments

✓ FANUC 0İ MF
✓ BBT 40/12.000 rpm BBT 40/15.000 rpm direct drive spindle
✓ Coolant through spindle center (30 bar)
✓ Air conditioner for electrical cabinet
✓ 4th axis with CNC rotary table
✓ Tool length measurement
✓ Workpiece measurement
✓ Automatic door
✓ Chip conveyor
✓ Oil mist collector unit
✓ Linear encoder

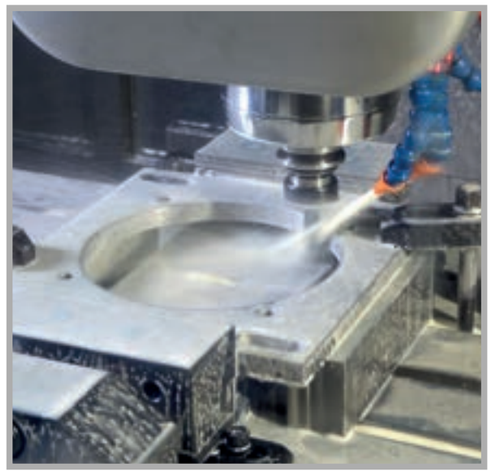

TMC-SERIES CNC VERTICAL MACHINING CENTERS

Body Structure

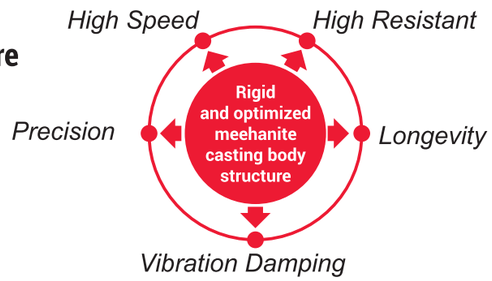

Working Field

Stroke	X	Y	Z	
TMC 850	850	510	560	mm
TMC 1000	1020	510	560	mm
TMC 1200	1200	600	600	mm
TMC 1300	1300	700	700	mm
TMC 1600	1600	700	700	mm

Rapid Axis Speeds	X	Y	Z	
TMC 850	36	36	36	m/min
TMC 1000	36	36	36	m/min
TMC 1200	36	36	36	m/min
TMC 1300	36	36	36	m/min
TMC 1600	36	36	36	m/min

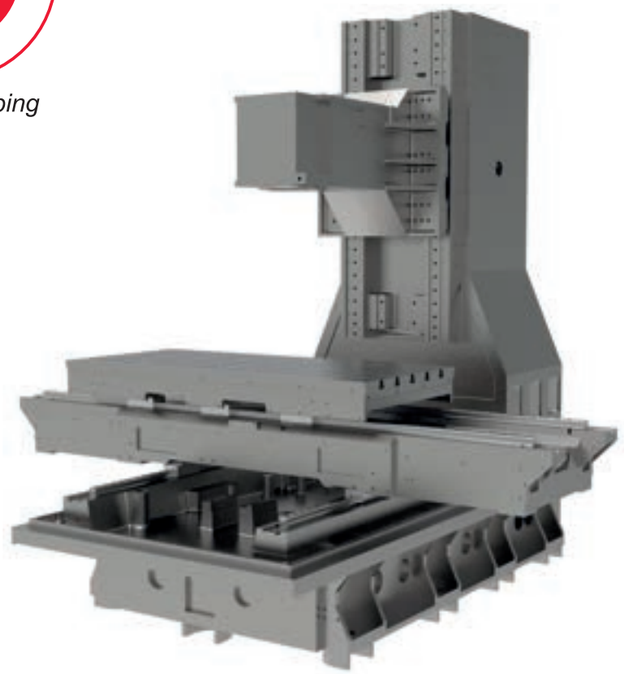

Work Piece Loading Capacity

Loading Capacity	m	
TMC 850	500	kg
TMC 1000	500	kg
TMC 1200	1000	kg
TMC 1300	1200	kg
TMC 1600	1200	kg

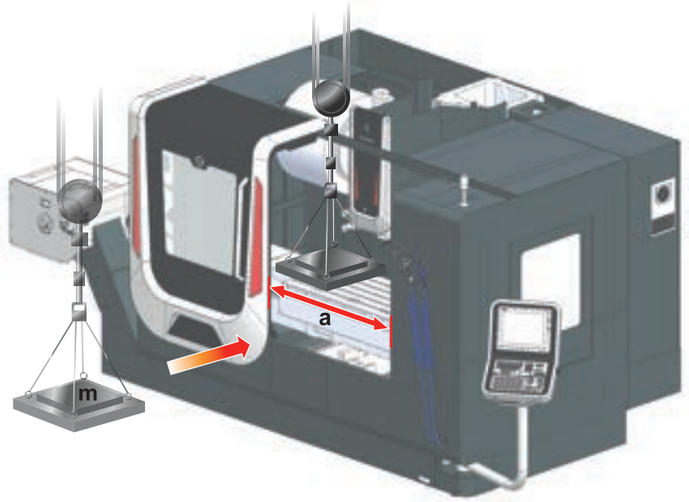

Table Measurement

Loading Capacity	L	W	
TMC 850	1000	500	mm
TMC 1000	1200	500	mm
TMC 1200	1300	600	mm
TMC 1300	1450	700	mm
TMC 1600	1750	700	mm

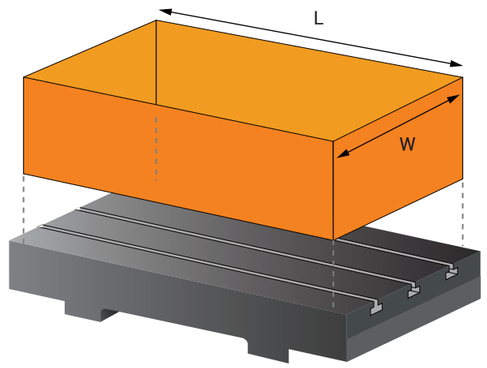

Rigid Structure

Based on the combination of deltoid column and main body provides excellent vibration damping and cutting pressure distribution.

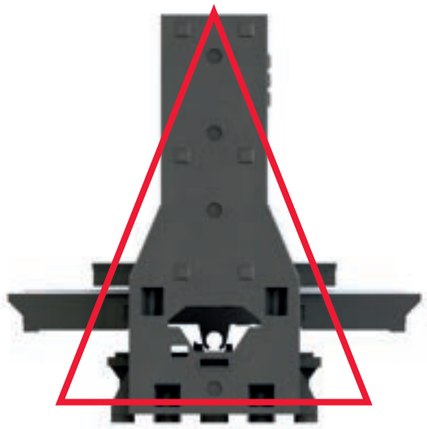

Finite Element Method

By using the finite element method, optimum body structure is obtained.

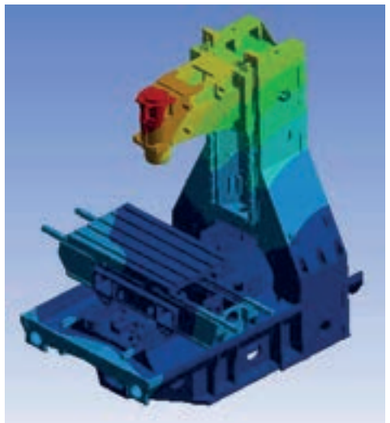

Extremely Precise Linear Equipment

Precise positioning, repeatibility, minimum friction, rigid linear way and extremely precise, grinded, front loading and without back-lash ball-screw and linear way tools in order to operate with less noise.

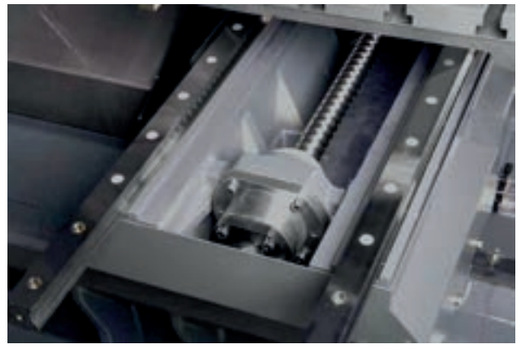

Direct Drive Servo Motors

Direct drive connection between motor and ball-screw shaft without back-lash with precise motion performance.

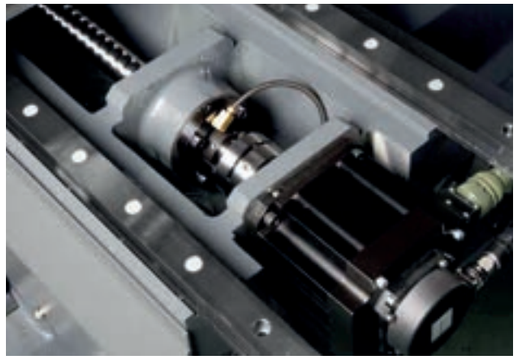

Tool Changer System

Rigid Taping with 24 Tool storage capacity ATC (Automatic Tool Changer)

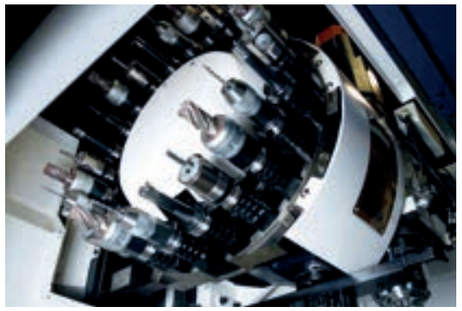

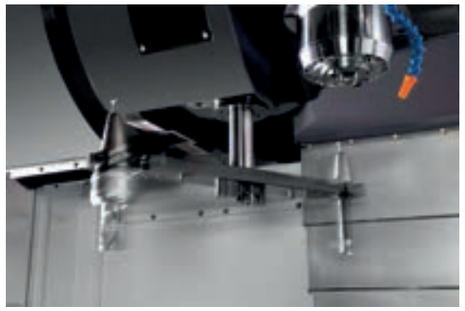

Direct-Drive Spindle

Powerful working ability with high heat distribution performance, low vibration, less noise and easy maintenance.

Speed	BT-40	BBT-40	CTS
10.000 rpm	○	○	○
12.000 rpm	○	●	●
15.000 rpm	○	○	○

std : ●
opt : ○

Spindle Cooling System

Automatic controlled cooling system to prevent thermal deformation and to increase longevity of the spindle.

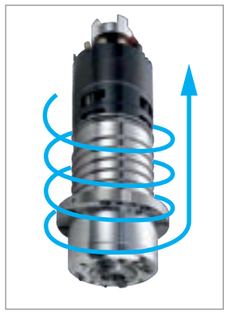

Cooling through Spindle (Optional)

Excellent cutting ability and longevity of spindle with cooling through spindle.

Chip Conveyor

Very flexible, it allows easy transportation of (metal, fiber, teflon, delrin (POM) etc.) chips.

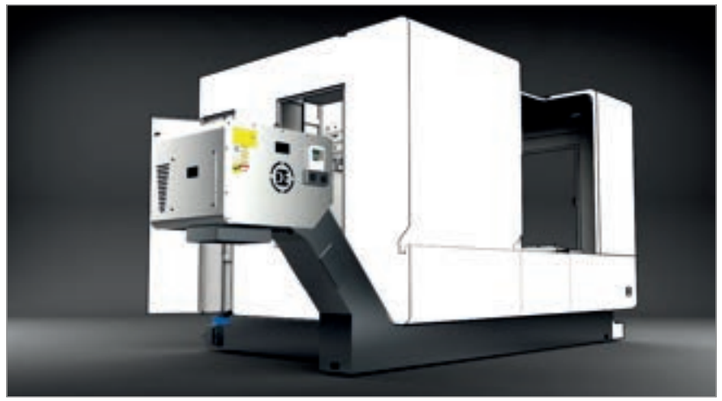

Coolant Tank

350/400 lt. capacity, self-filtered and functional tank design provides optimum cooling and easy maintenance.

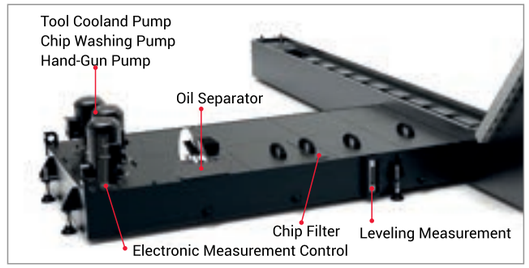

Chip Bucket (Opt.)

Convertible and braking features provides easy storage and discharge of any kinds of chips.

Control Unit

User Friendly interface with latest technology and ergonomic design.

TMC-SERIES CNC VERTICAL MACHINING CENTERS

				TMC 850	TMC 1000	TMC 1200	TMC 1300	TMC 1600
Travel	X-Axis Travel	mm		850	1.020	1.200	1.300	1.600
	Y-Axis Travel	mm		510	510	600	700	700
	Z-Axis Travel	mm		560	560	600	700	700
	Ball-screw Type			C3	C3	C3	C3	C3
	Distance from spindle nose to table top	mm		150~710	150~710	150~750	130~830	130~830
	Guideway Type			Roller Type	Roller Type	Roller Type	Roller Type	Roller Type
	Guideways X/Y/Z	mm		30/35/35	30/35/35	35/45/45	35/45/45	35/45/45
Working Table	Table Size (X Direction)	mm		1.000	1.200	1.300	1.450	1.750
	Table Size (Y Direction)	mm		500	500	600	700	700
	T-Slot Size	mm		18	18	18	18	18
	T-Slot Quantity	piece		5	5	5	5	5
	T-Slot Distance	mm		100	100	100	125	125
	Table Load Capacity	kg		500	500	1.000	1.200	1.200
Spindle	Spindle Taper ([X], 7/24 Taper)			ISO#40	ISO#40	ISO#40	ISO#40	ISO#40
	Spindle Speed	rpm		10.000	10.000	10.000	10.000	10.000
	Spindle Driven System			Direct	Direct	Direct	Direct	Direct
Feed Rate	X/Y Axis Rapid Feedrate	m/min		36	36	36	36	36
	Z Axis Rapid Feedrate	m/min		36	36	36	36	36
	Cutting Feedrate	m/min		1~15	1~15	1~15	1~15	1~15
Tool Magazine	Tool Magazine Capacity	piece		24	24	24	24	24
	Method of Tool Exchange			Arm Type	Arm Type	Arm Type	Arm Type	Arm Type
	Type of Tool Shank			BBT	BBT	BBT	BBT	BBT
	Tool Change Time (Tool to tool)	s		1,3	1,3	1,3	1,3	1,3
	Tool Change Time (Chip-to-Chip)	s		3,1	3,1	3,7	3,7	3,7
	Pull Stud Angle			45	45	45	45	45
	Max. Tool Diameter	mm		Ø100/Ø150	Ø100/Ø150	Ø100/Ø150	Ø100/Ø150	Ø100/Ø150
	Max Tool Length	mm		300	300	300	300	300
	Max Tool Weight	kg		6	6	8	8	8
	Tool Selection Method			Shortest Path	Shortest Path	Shortest Path	Shortest Path	Shortest Path
Accuracy	Positioning Accuracy	mm		±0,004/300	±0,004/300	±0,004/300	±0,004/300	±0,005/300
	Repeatability	mm		±0,002/300	±0,002/300	±0,002/300	±0,002/300	±0,002/300
Coolant Capacity Motor & Pressure & Volume	Coolant Pump	kW-(bar)		0,55 - (3)	0,55 - (3)	0,55 - (3)	0,55 - (3)	0,55 - (3)
	Coolant Pump for Coolant Gun	kW-(bar)		0,37-(2)	0,37-(2)	0,37-(2)	0,37-(2)	0,37-(2)
	Coolant Pump for Chip Clean	kW-(bar)		1,10-(2,5)	1,10-(2,5)	1,10-(2,5)	1,10-(2,5)	1,10-(2,5)
	Coolant Tank Capacity	liter		350	350	400	400	400
Machine Size	Length	mm		2.900	2.900	4.700	5.000	6.200
	Width	mm		2.420	2.420	3.400	3.500	3.800
	Height	mm		2.850	2.850	2.600	2.800	3.050
	Weight	~kg		5.000	5.200	6.800	8.500	10.000

MITSUBISHI CONTROL UNIT (Std.)

				TMC 850 (M)	TMC 1000 (M)	TMC 1200 (M)	TMC 1300 (M)	TMC 1600 (M)
Screen				10,4"	10,4"	15"	15"	15"
Spindle Motor	Code			S-J-DG11/100-03T	S-J-DG11/100-03T	S-J-DG11/120-03T	S-J-DG15/120-02T-K-S	S-J-DG15/120-02T-K-S
	Turnover	Rpm		10000	10000	12000	12000	
	CTS Preparation			*-	*-	+	+	+
	Torque(con./max.)	N-m		47,7/115	47,7/115	47,7/115	77,8/191	77,8/191
	Power(con./max.)	kW		7,5/18	7,5/18	7,5/18	11/30	11/30
Axis Motor	Code			HG224S-D48	HG224S-D48	HG354S-D48	HG354S-D48	HG354S-D48
	Torque X/Y(con./max.)	N-m		7/46,5	7/46,5	11,1/75	11,1/75	14.3/122
	Power X/Y	kW		2,2	2,2	3,5	3,5	3,5
	Code Z			HG354BS-D48	HG354BS-D48	HG354BS-D48	HG453BS-D48	HG453BS-D48
	Torque Z(con./max.)	N-m		11,1/75	11,1/75	11,1/75	14,3/122	14,3/122
	Power Z	kW		3,5	3,5	3,5	4,5	4,5
Air & Power Supply	Air pressure	bar		5,0/6,0	5,0/6,0	5,0/6,0	5,0/6,0	5,0/6,0
	Power Requirement	kVA		32	32	32	43	43

* CTS = SJ-DG11/120-03T-S (12.000 rpm)

FANUC CONTROL UNIT (Ops.)

				TMC 850 (F)	TMC 1000 (F)	TMC 1200 (F)	TMC 1300 (F)	TMC 1600 (F)
Screen				10,4"	10,4"	15"	15"	15"
Spindle Motor	Code			ßiIT 8 /12000-B	ßiIT 8 /12000-B	ßiIT 12/10000-B	ßiIT 12/10000-B	ßiIT 12/10000-B
	Turnover	Rpm		12000	12000	10000	10000	10000
	CTS Preparation			**-	**-	+	+	+
	Torque(con./max.)	N-m		35,8/105	35,8/105	52,5/130	52,5/130	52,5/130
	Power(con./max.)	kW		7,5/16,5	7,5/16,5	11/20,4	11/20,4	11/20,4
Axis Motor	Code			ßiS 22/3000-B	ßiS 22/3000-B	ßiS 22/3000-B	ßiS 22/3000-B	ßiS 22/3000-B
	Torque X/Y(con./max.)	N-m		20/45	20/45	20/45	20/45	20/45
	Power X/Y	kW		3	3	3	3	3
	Code Z			ßiS 22/3000-B	ßiS 22/3000-B	ßiS 22/3000-B	ßiS 40/2000-B	ßiS 40/2000-B
	Torque Z(con./max.)	N-m		20/45	20/45	20/45	36/90	36/90
	Power Z	kW		3	3	3	3	3
Air & Power Supply	Air pressure	bar		5,0/6,0	5,0/6,0	5,0/6,0	5,0/6,0	5,0/6,0
	Power Requirement	kVA		32	32	32	32	32

* * CTS = βiIT 12/10000-B (10.000 rpm)

*** The values in the table may change in case of a machine update.**